CREATING SHEET PARTS – EDGE SKIRTING
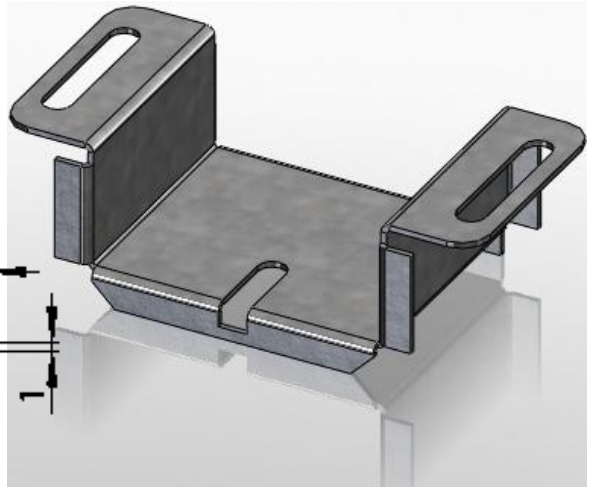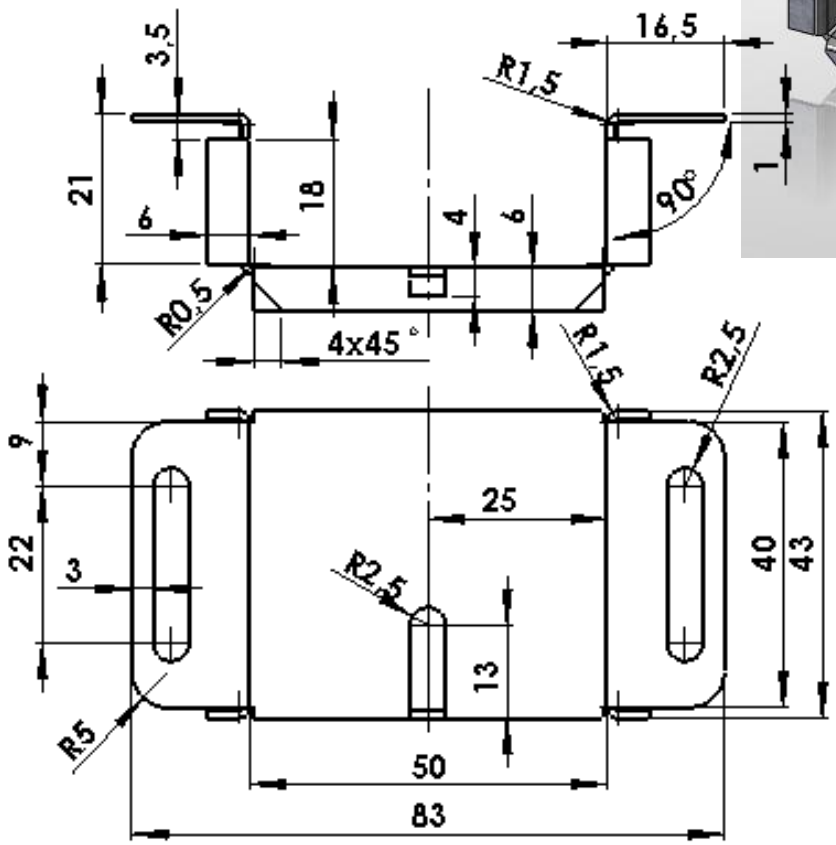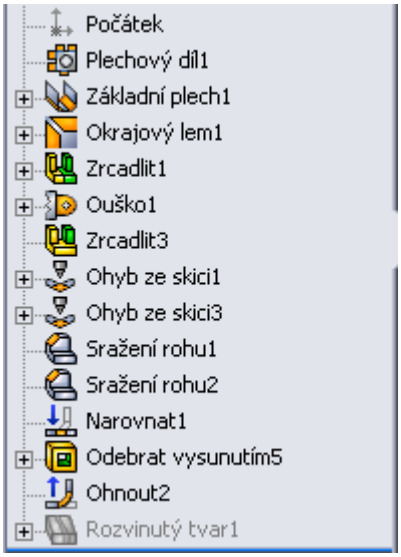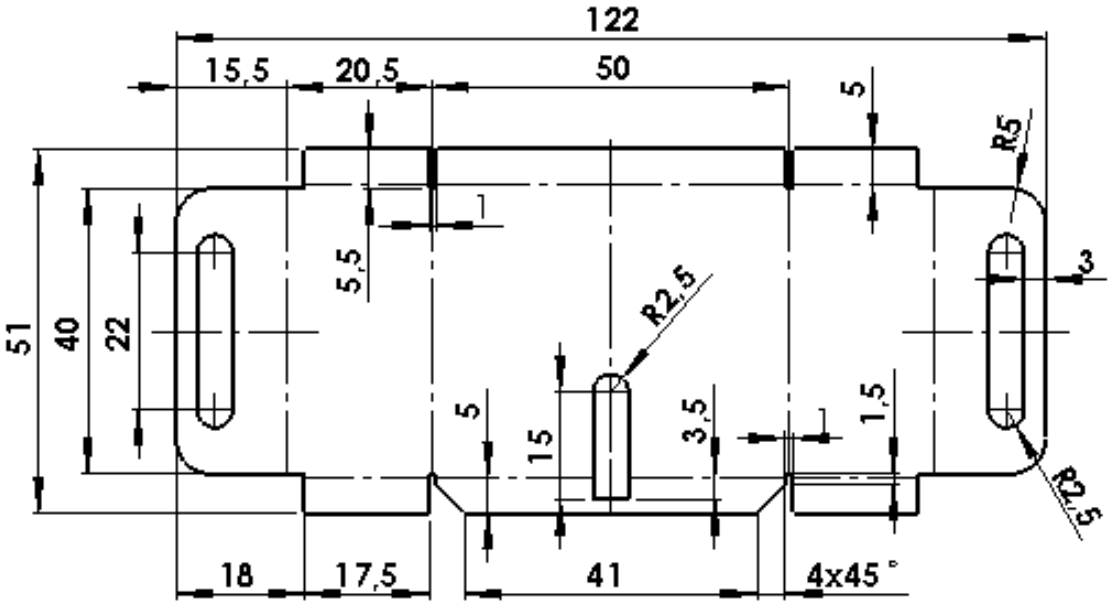
Model a sheet part **WASHER** by following pattern and develop its shape. Draw design of sheet part according to CSN.